THIS DOCUMENT IS THE PROPERTY OF KEYSTONE ELECTRONICS CORP. AND SHALL NOT BE REPRODUCED, DISTRIBUTED OR USED AS A BASIS FOR MANUFACTURE WITHOUT PRIOR WRITTEN PERMISSION FROM KEYSTONE ELECTRONICS CORP.

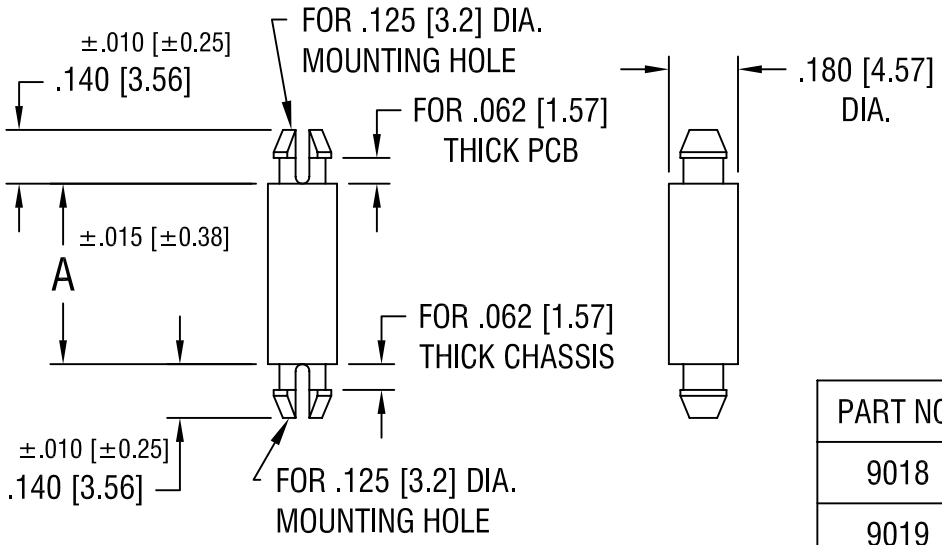

PART NO.	'A' DIM.
9018	.125 [3.18]
9019	.187 [4.75]
9020	.250 [6.35]
9021	.375 [9.52]
9022	.500 [12.70]
9023	.625 [15.87]
9024	.750 [19.05]
9025	.875 [22.22]
9026	1.000 [25.40]

KEYSTONE ELECTRONICS CORP.
ASTORIA, N.Y. 11105-2017

PART NAME: PC LOCK-IN SUPPORT

MATERIAL: NYLON UL 94V-0

FINISH: -

DRN BY: BOONE | DATE: 8.29.06

APP'D: LN | SCALE: 2X

TOLERANCES INCH [MM]
DECIMAL ± .005 [± 0.15]
ANGULAR ± 1°
UNLESS OTHERWISE SPECIFIED

CODE: C/M

DWG NO. 9018-9026

DATE	DESCRIPTION	REV.