THIS DOCUMENT IS THE PROPERTY OF KEYSTONE ELECTRONICS CORP. AND SHALL NOT BE REPRODUCED, DISTRIBUTED OR USED AS A BASIS FOR MANUFACTURE WITHOUT PRIOR WRITTEN PERMISSION FROM KEYSTONE ELECTRONICS CORP.

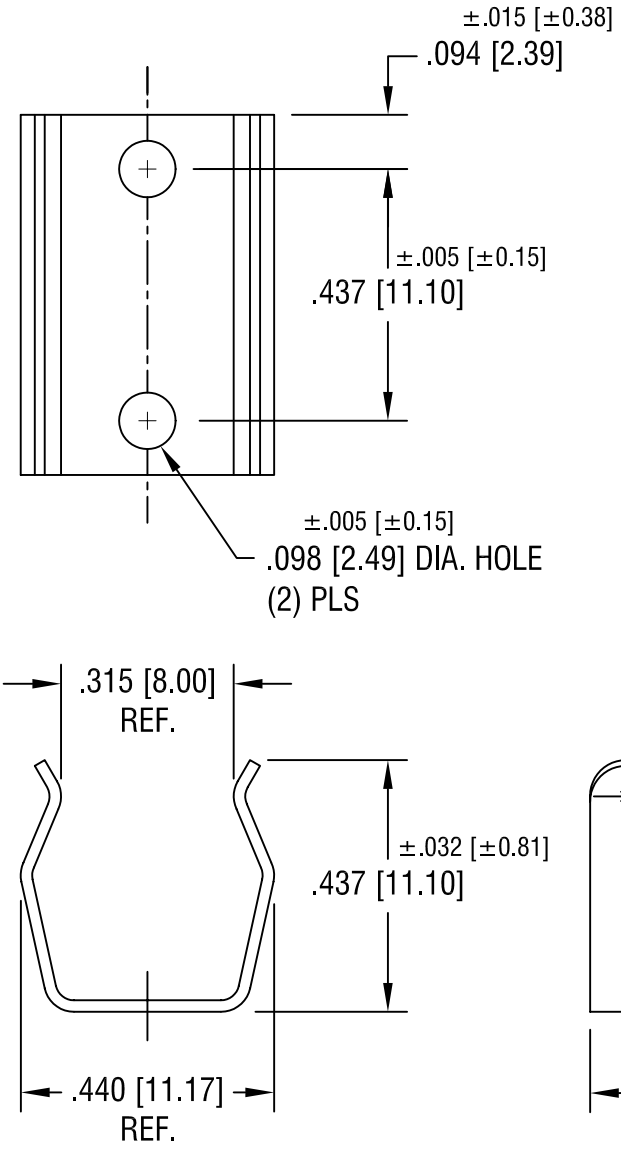

12.13.99	CHANGE AS PER ECN 99–103	B
4.21.94	CHANGE AS PER ECR 94–005	A
DATE	DESCRIPTION	REV.

KEYSTONE ELECTRONICS CORP.
ASTORIA, N.Y. 11105-2017

PART NAME: 'AAA' BATTERY CLIP

MATERIAL: .020 [0.50] TH'K ALUMINUM 2024-T3

FINISH: -

DRN BY: BOONE

DATE: 10.30.81

APP'D:

SCALE: 3X

TOLERANCES INCH [MM]
DECIMAL ± .010 [± 0.25]
ANGULAR ± 1°
UNLESS OTHERWISE SPECIFIED

CODE: C

DWG NO. 90