THIS DOCUMENT IS THE PROPERTY OF KEYSTONE ELECTRONICS CORP. AND SHALL NOT BE REPRODUCED, DISTRIBUTED OR USED AS A BASIS FOR MANUFACTURE WITHOUT PRIOR WRITTEN PERMISSION FROM KEYSTONE ELECTRONICS CORP.

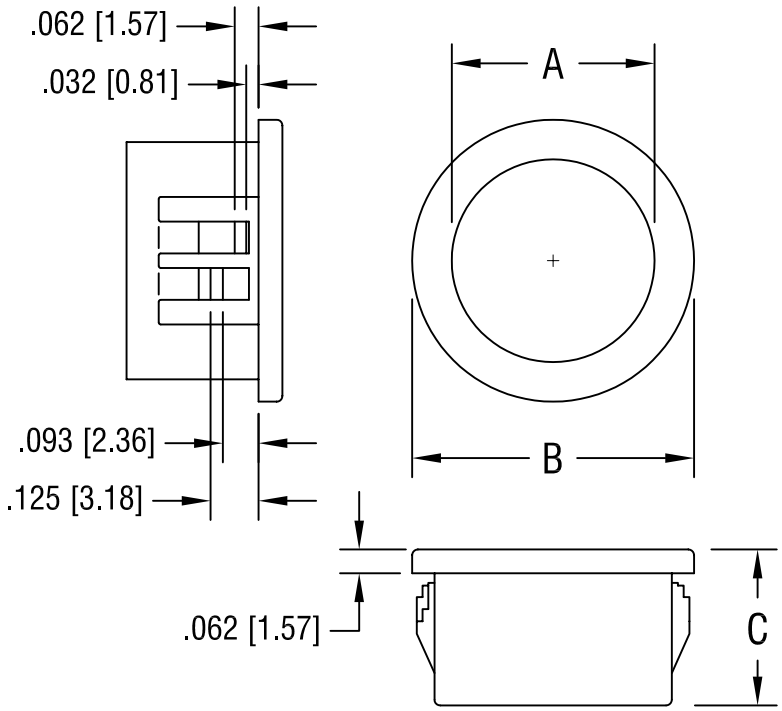

MOUNTING HOLE	'A' DIA.	'B' DIA.	'C' DIM.
.562 [14.3]	.437 [11.10]	.656 [16.66]	.406 [10.31]

DATE	DESCRIPTION	REV.

KEYSTONE ELECTRONICS CORP.
ASTORIA, N.Y. 11105-2017

PART NAME: NYLON INSULATING BUSHING

MATERIAL: NYLON 6/6, BLACK UL 94V-2

FINISH: -

DRN BY: BOONE | DATE: 11.22.06

APP'D: | SCALE: NONE

TOLERANCES INCH [MM]
DECIMAL ± .015 [± 0.38]
ANGULAR ± 1°
UNLESS OTHERWISE SPECIFIED

CODE: C/M

DWG NO.: 8475