THIS DOCUMENT IS THE PROPERTY OF KEYSTONE ELECTRONICS CORP. AND SHALL NOT BE REPRODUCED, DISTRIBUTED OR USED AS A BASIS FOR MANUFACTURE WITHOUT PRIOR WRITTEN PERMISSION FROM KEYSTONE ELECTRONICS CORP.

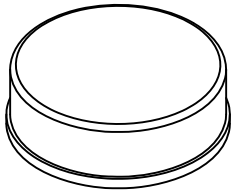

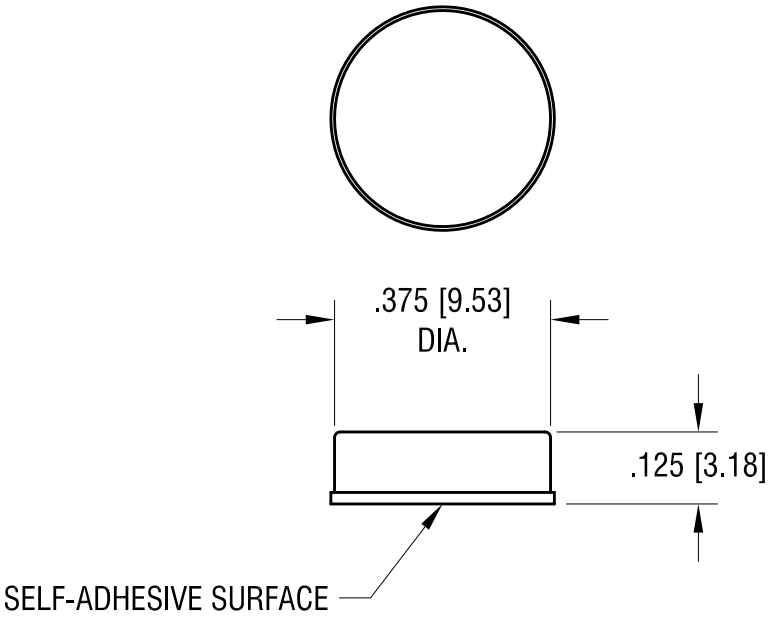

PART NO.	COLOR
780-B	BLACK
780-C	CLEAR

KEYSTONE ELECTRONICS CORP.

www.keyelco.com • ASTORIA, N.Y. 11105-2017 • Tel (718) 956-8900

PART NAME: CYLINDRICAL SELF-ADHESIVE BUMPER

MATERIAL: MOLDED POLYURETHANE

FINISH: -

DRN BY: NT | DATE: 5.09.11

APP'D: LN | SCALE: 3X

TOLERANCES INCH [MM]
DECIMAL ± .005 [± 0.13]
ANGULAR ± 1°
UNLESS OTHERWISE SPECIFIED

CODE: C/M

DWG NO. 780-

DATE	DESCRIPTION	REV.