THIS DOCUMENT IS THE PROPERTY OF KEYSTONE ELECTRONICS CORP. AND SHALL NOT BE REPRODUCED, DISTRIBUTED OR USED AS A BASIS FOR MANUFACTURE WITHOUT PRIOR WRITTEN PERMISSION FROM KEYSTONE ELECTRONICS CORP.

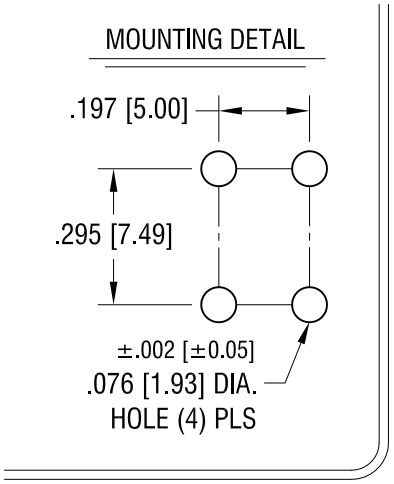

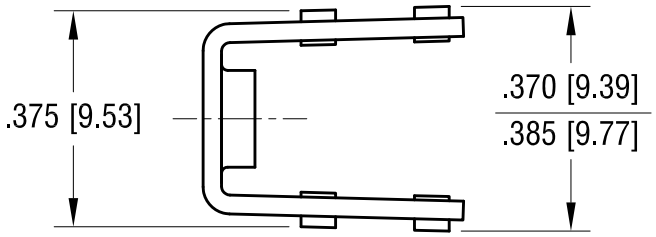

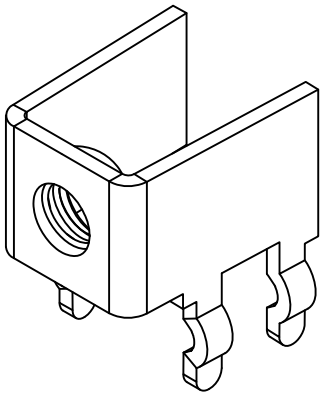

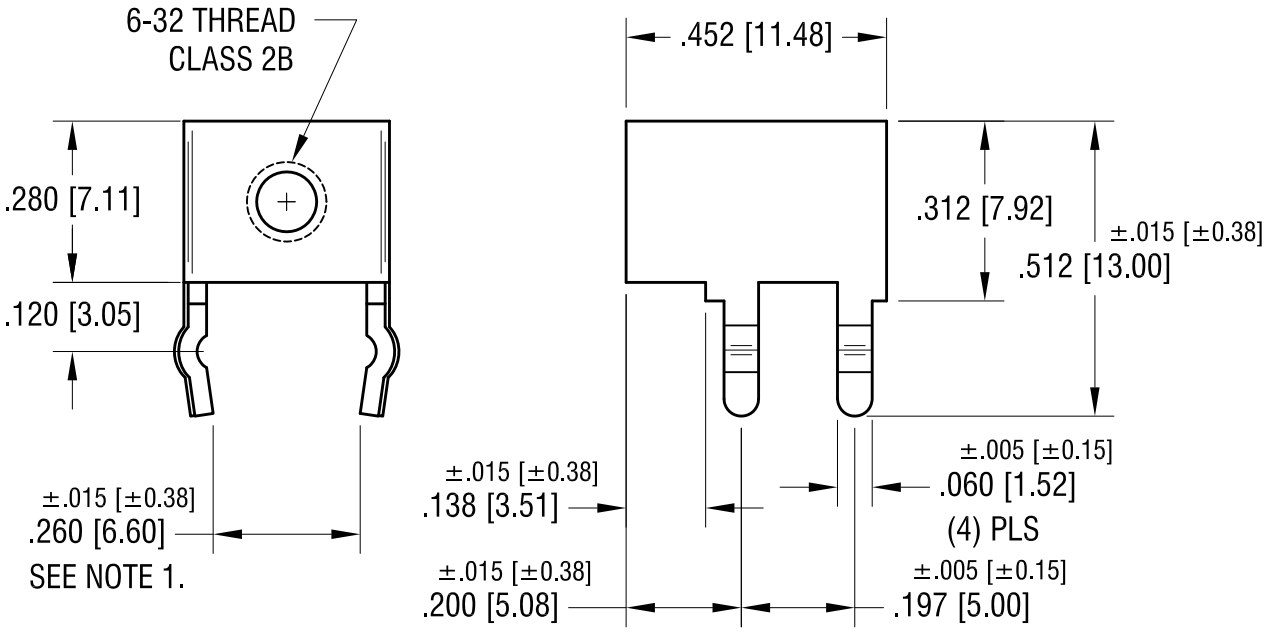

NOTE:

1. .260 [6.60] ±.015 [±0.38] DIMENSION TO BE MEASURED AT END OF LEG, NOT AT SEATING PLANE.

DATE	DESCRIPTION	REV.
7.08.09	CHANGE AS PER ECN 09–096	B
1.30.08	CHANGE AS PER ECN 08–065	A

KEYSTONE ELECTRONICS CORP.

www.keyelco.com • ASTORIA, N.Y. 11105-2017 • Tel (718) 956-8900

PART NAME	PC SCREW TERMINAL		
MATERIAL	.032 [0.81] TH'K BRASS		
FINISH	MATTE TIN PLATE	DRN BY BOONE	DATE 9.6.01
		APP'D LN	SCALE 3X
TOLERANCES INCH [MM] DECIMAL ± .010 [± 0.25] ANGULAR ± 1° UNLESS OTHERWISE SPECIFIED	CODE C	DWG NO. 7779	