THIS DOCUMENT IS THE PROPERTY OF KEYSTONE ELECTRONICS CORP. AND SHALL NOT BE REPRODUCED, DISTRIBUTED OR USED AS A BASIS FOR MANUFACTURE WITHOUT PRIOR WRITTEN PERMISSION FROM KEYSTONE ELECTRONICS CORP.

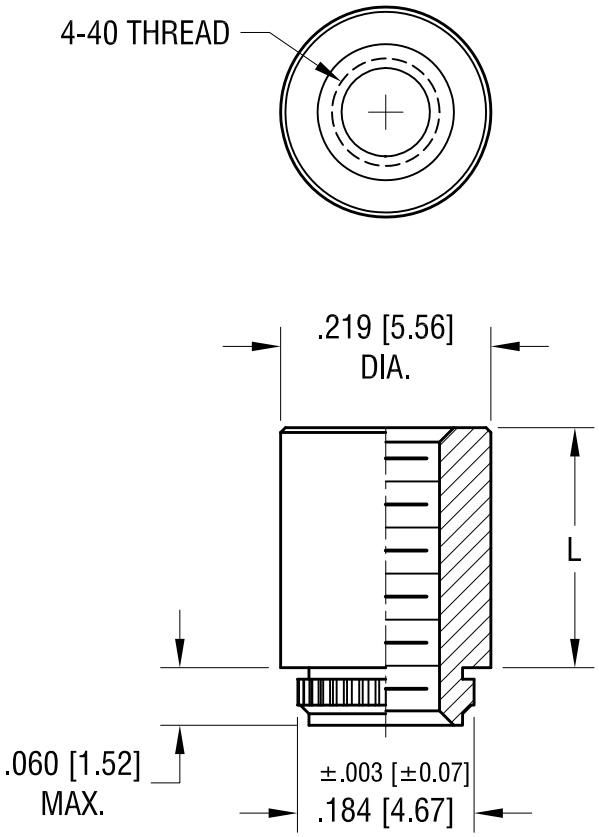

PART NO.	'L' DIM.
4861	.065 [1.65]
4862	.125 [3.18]
4863	.250 [6.35]
4864	.375 [9.53]

DATE	DESCRIPTION	REV.
6.30.09	CHANGE AS PER ECN 09-092	B
12.19.05	CHANGE AS PER ECN 05-084	A

KEYSTONE ELECTRONICS CORP.

www.keyelco.com • ASTORIA, N.Y. 11105-2017 • Tel (718) 956-8900

PART NAME: FORCE-FIT STANDOFF, THREADED

MATERIAL: STAINLESS STEEL

FINISH: NONE

DRN BY: BOONE | DATE: 3.14.97

APP'D: LN | SCALE: 5X

TOLERANCES INCH [MM]
DECIMAL ± .005 [± 0.15]
ANGULAR ± 1°
UNLESS OTHERWISE SPECIFIED

CODE: C

DWG NO. 4861-4864