THIS DOCUMENT IS THE PROPERTY OF KEYSTONE ELECTRONICS CORP. AND SHALL NOT BE REPRODUCED, DISTRIBUTED OR USED AS A BASIS FOR MANUFACTURE WITHOUT PRIOR WRITTEN PERMISSION FROM KEYSTONE ELECTRONICS CORP.

PAD LAYOUT

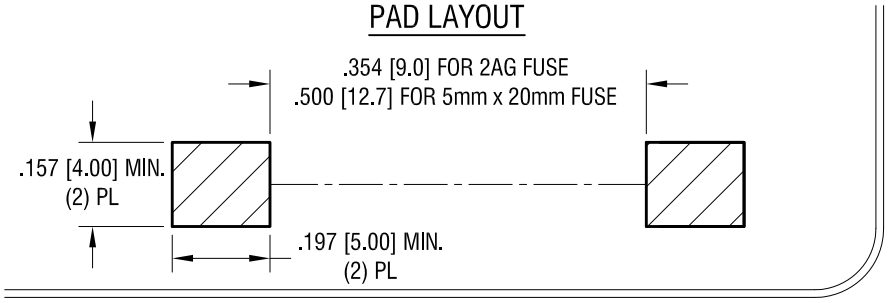

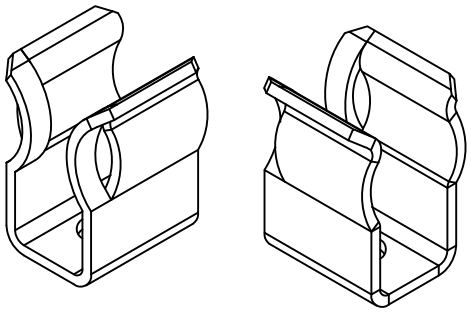

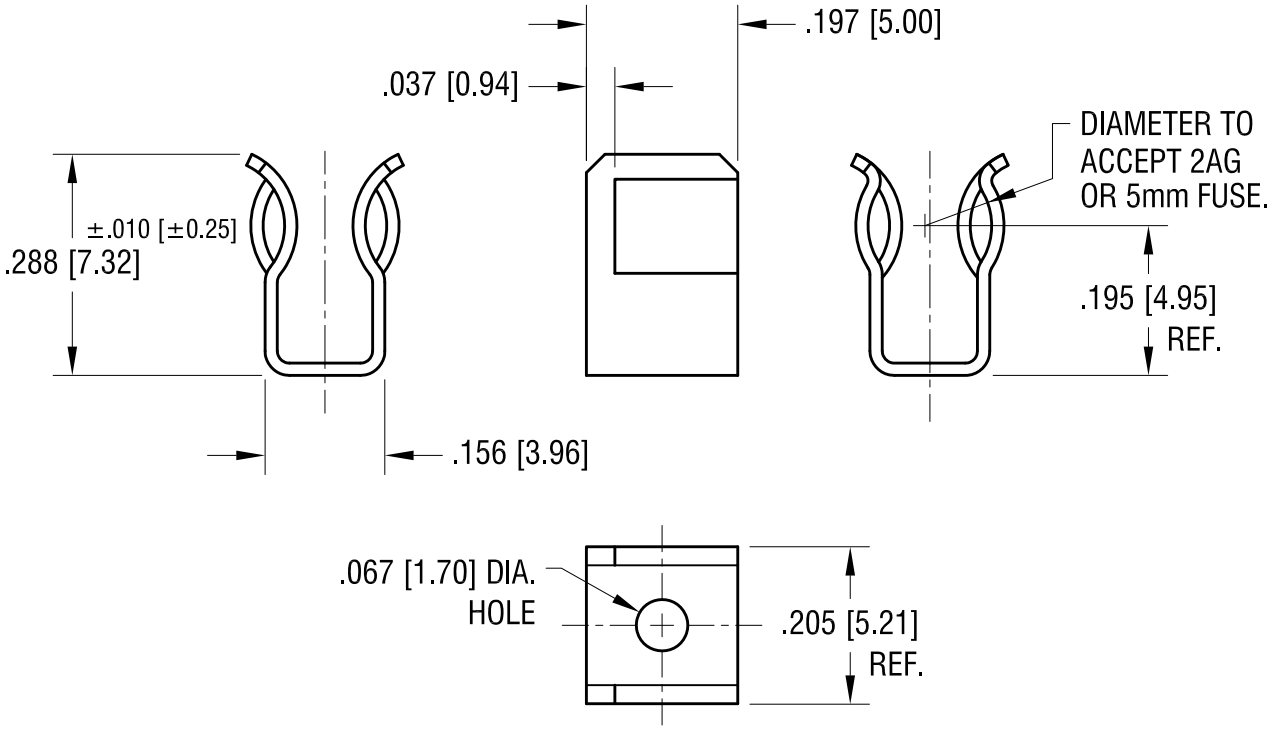

DATE	DESCRIPTION	REV.
12.08.10	CHANGE AS PER ECN 10–08	C
6.08.09	CHANGE AS PER ECN 09–053	B
2.28.08	CHANGE AS PER ECN 08–091	A

KEYSTONE ELECTRONICS CORP.

www.keyelco.com • ASTORIA, N.Y. 11105-2017 • Tel (718) 956-8900

PART NAME: 2AG/5mm SURFACE MOUNT FUSE CLIP

MATERIAL: .016 [0.40] TH'K BRASS

FINISH: MATTE TIN PLATE

DRN BY: BOONE | DATE: 4.02.98

APP'D: LN | SCALE: 4X

TOLERANCES INCH [MM]
DECIMAL ± .005 [± 0.15]
ANGULAR ± 1°
UNLESS OTHERWISE SPECIFIED

CODE: C

DWG NO. 3561