THIS DOCUMENT IS THE PROPERTY OF KEYSTONE ELECTRONICS CORP. AND SHALL NOT BE REPRODUCED, DISTRIBUTED OR USED AS A BASIS FOR MANUFACTURE WITHOUT PRIOR WRITTEN PERMISSION FROM KEYSTONE ELECTRONICS CORP.

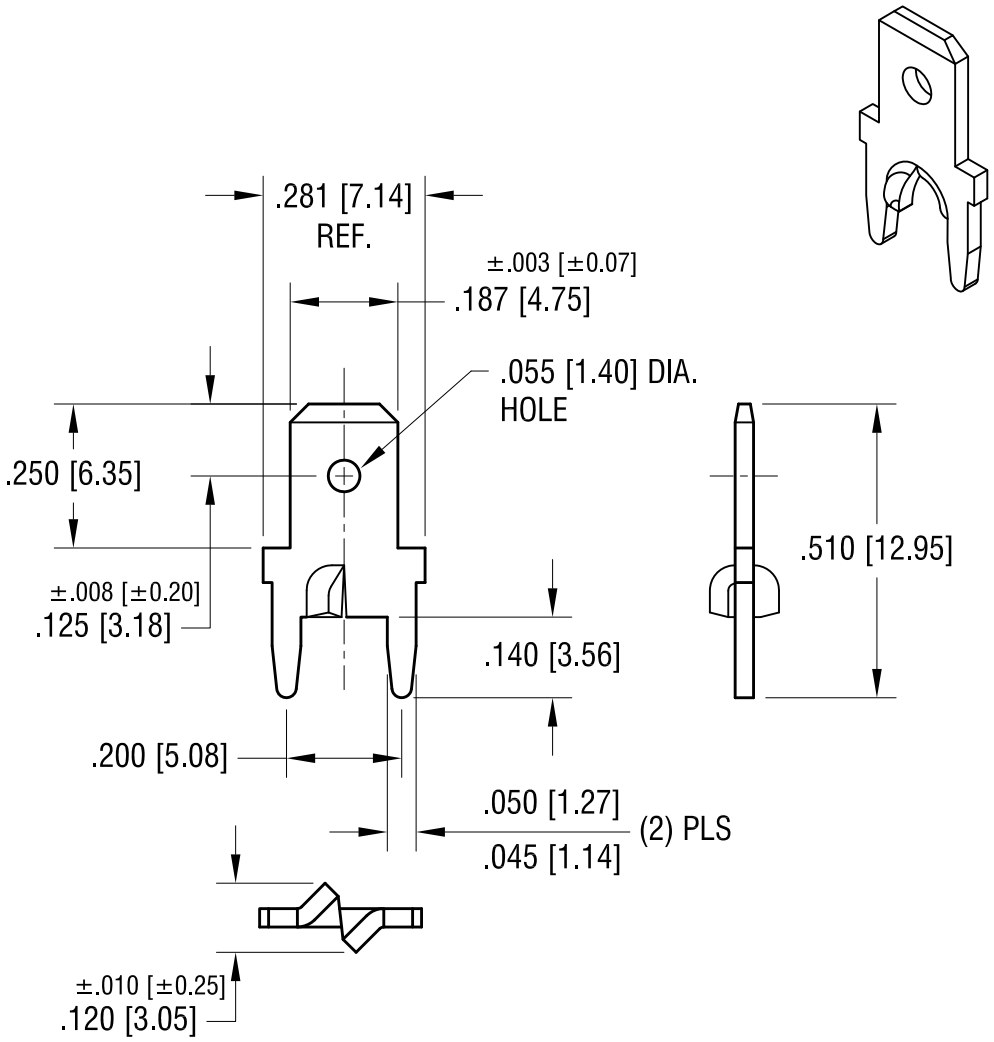

NOTE:

MOUNTING HOLE SIZE:
.052 [1.32] DIA.

DATE	DESCRIPTION	REV.
6.18.09	CHANGE AS PER ECN 09-075	B
5.14.04	CHANGE AS PER ECN 04-036	A

KEYSTONE ELECTRONICS CORP.

www.keyelco.com • ASTORIA, N.Y. 11105-2017 • Tel (718) 956-8900

PART NAME	PC STURDI-MOUNT QUICK-FIT TERMINAL		
MATERIAL	.032 [0.81] TH'K BRASS		
FINISH	MATTE TIN PLATE	DRN BY BOONE	DATE 2.12.99
		APP'D LN	SCALE 3X
TOLERANCES INCH [MM] DECIMAL ±.005 [±0.15] ANGULAR ± 1° UNLESS OTHERWISE SPECIFIED	CODE C	DWG NO. 1212-ST	