DATE	DESCRIPTION	REV.

SECTION C-C

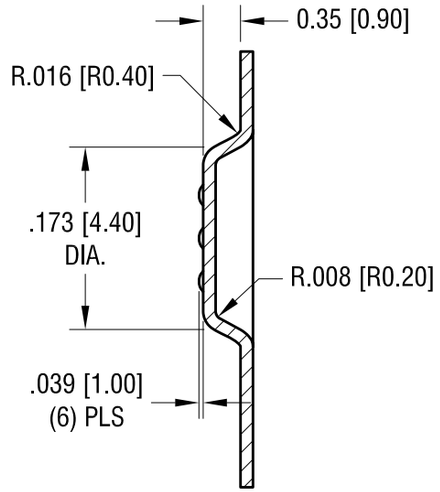

DETAILS B

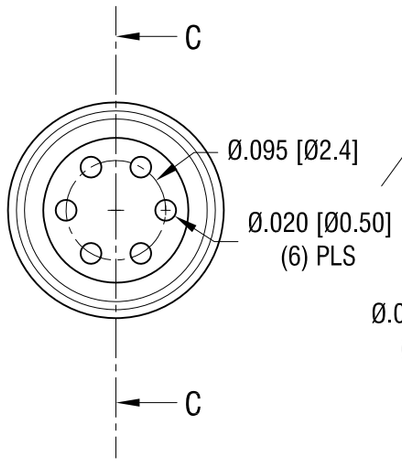

SECTION A-A

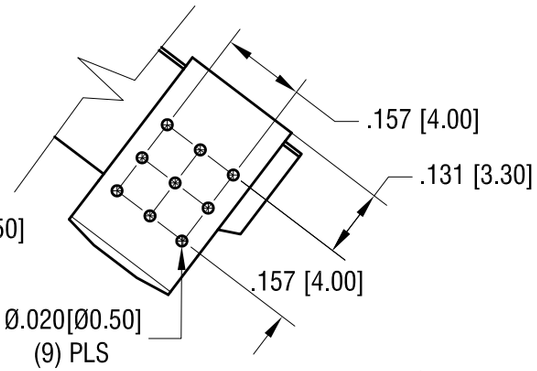

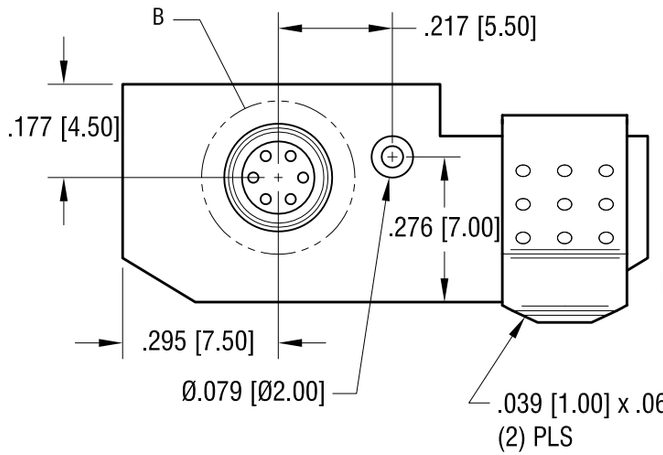

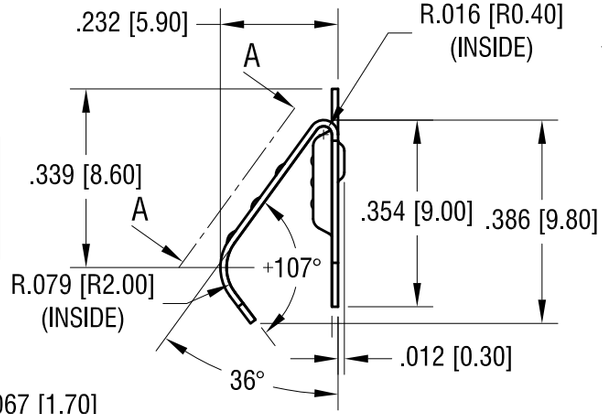

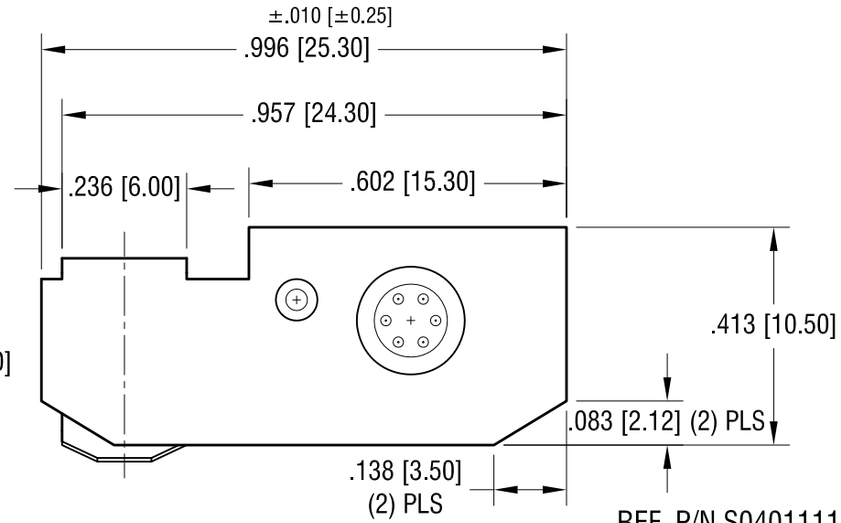

REF. P/N S040111114EV.C

NOTE:

1. HEAT TREAT TO SPRING TEMPER

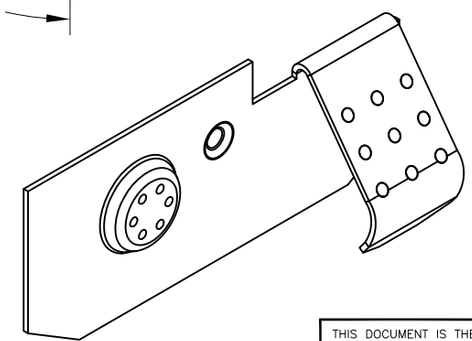

THIS DOCUMENT IS THE PROPERTY OF KEYSTONE ELECTRONICS CORP. AND SHALL NOT BE REPRODUCED, DISTRIBUTED OR USED AS A BASIS FOR MANUFACTURE WITHOUT PRIOR WRITTEN PERMISSION FROM KEYSTONE ELECTRONICS CORP.

KEYSTONE ELECTRONICS CORP.
www.keyelco.com • ASTORIA, N.Y. 11105-2017 • Tel (718) 956-8900

PART NAME	BATTERY CONTACT		
MATERIAL	.012 [0.30] TH'K ANNEALED SPRING STEEL		
FINISH	NICKEL PLATE	DRN BY NT	DATE 12.02.09
		APP'D LN	SCALE 3X
TOLERANCES INCH [MM] DECIMAL ± .005 [± 0.13] ANGULAR ± 1° UNLESS OTHERWISE SPECIFIED	CODE C	DWG NO. C-8061-RAM	