THIS DOCUMENT IS THE PROPERTY OF KEYSTONE ELECTRONICS CORP. AND SHALL NOT BE REPRODUCED, DISTRIBUTED OR USED AS A BASIS FOR MANUFACTURE WITHOUT PRIOR WRITTEN PERMISSION FROM KEYSTONE ELECTRONICS CORP.

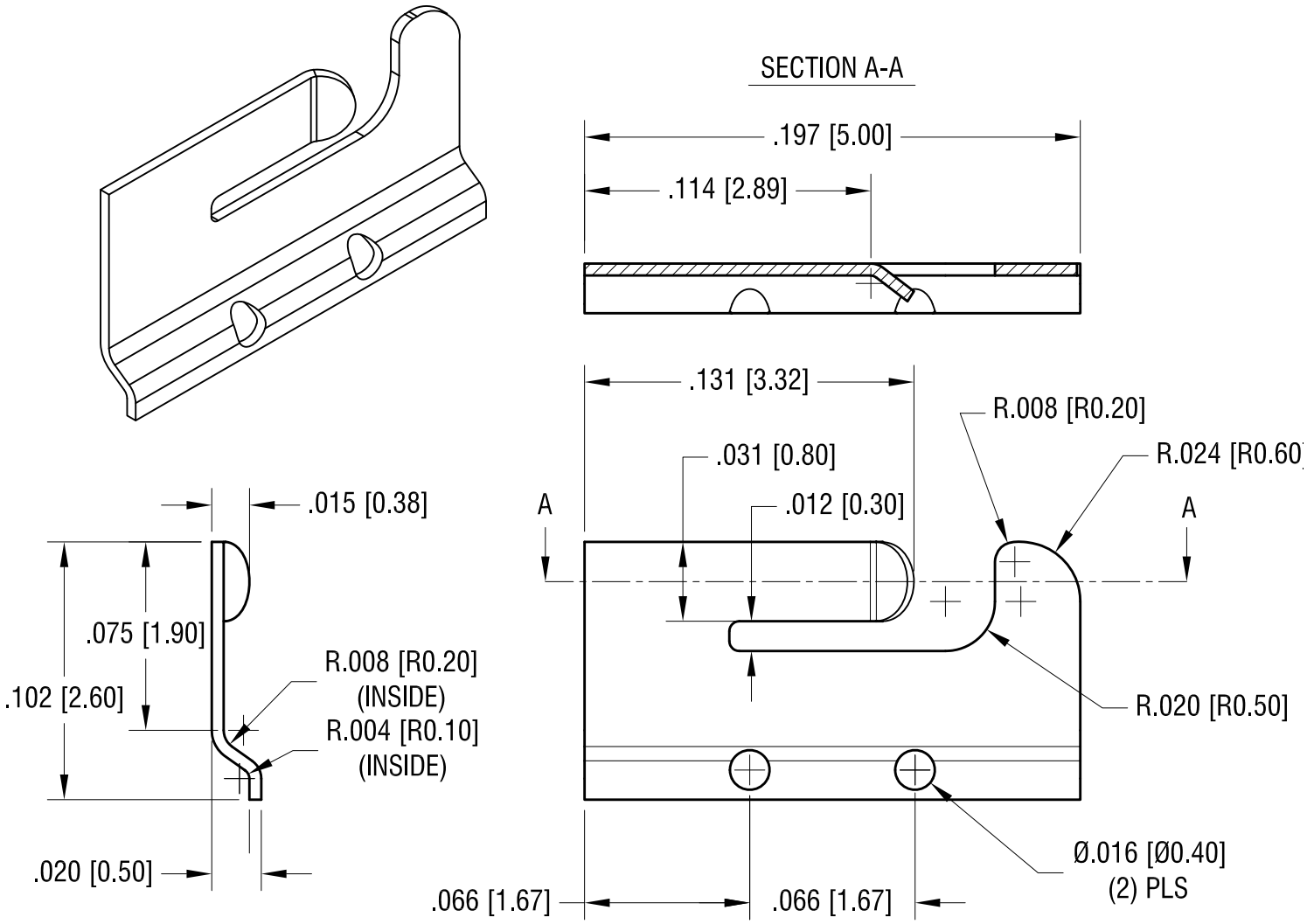

KEYSTONE ELECTRONICS CORP.

www.keyelco.com • ASTORIA, N.Y. 11105-2017 • Tel (718) 956-8900

PART NAME	BATTERY CONTACT		
MATERIAL	.005 [0.12] TH'K PHOSPHOR BRONZE		
FINISH	NICKEL PLATE	DRN BY NT	DATE 2.08.12
		APP'D LN	SCALE 15X
TOLERANCES INCH [MM] DECIMAL ± .005 [± 0.13] ANGULAR ± 1° UNLESS OTHERWISE SPECIFIED	CODE C/M	DWG NO. C-12600-EAR	

DATE	DESCRIPTION	REV.