THIS DOCUMENT IS THE PROPERTY OF KEYSTONE ELECTRONICS CORP. AND SHALL NOT BE REPRODUCED, DISTRIBUTED OR USED AS A BASIS FOR MANUFACTURE WITHOUT PRIOR WRITTEN PERMISSION FROM KEYSTONE ELECTRONICS CORP.

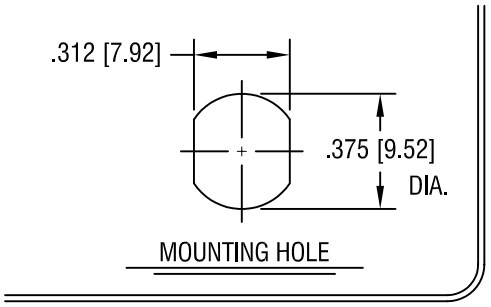

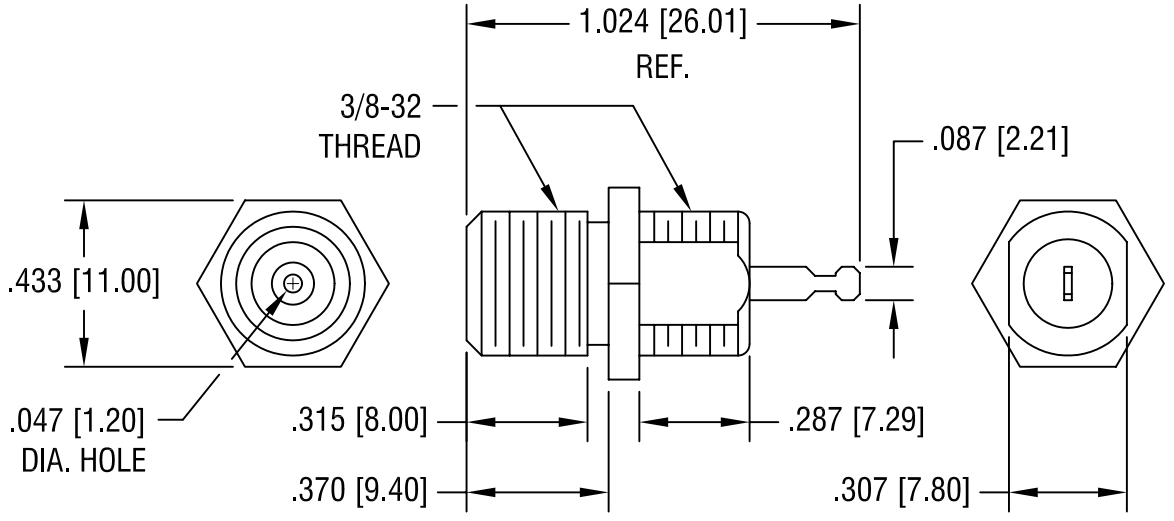

NOTES:

1. BODY:
   MAT'L - BRASS, NICKEL PLATE

   CONTACT:
   MAT'L - BRASS, TIN PLATE

   INSULATOR:
   MAT'L - POLYPROPELENE

2. ONE (1) NUT & ONE (1) FLATWASHER SUPPLIED.

DATE	DESCRIPTION	REV.

KEYSTONE ELECTRONICS CORP.
ASTORIA, N.Y. 11105-2017

PART NAME	PANEL MOUNT 'F' CONNECTOR		
MATERIAL	AS NOTED		
FINISH	AS NOTED	DRN BY BOONE	DATE 1.7.97
		APP'D LN	SCALE 2X
TOLERANCES INCH [MM] DECIMAL ± .005 [± 0.15] ANGULAR ± 1° UNLESS OTHERWISE SPECIFIED	CODE C/M	DWG NO. 912	