THIS DOCUMENT IS THE PROPERTY OF KEYSTONE ELECTRONICS CORP. AND SHALL NOT BE REPRODUCED, DISTRIBUTED OR USED AS A BASIS FOR MANUFACTURE WITHOUT PRIOR WRITTEN PERMISSION FROM KEYSTONE ELECTRONICS CORP.

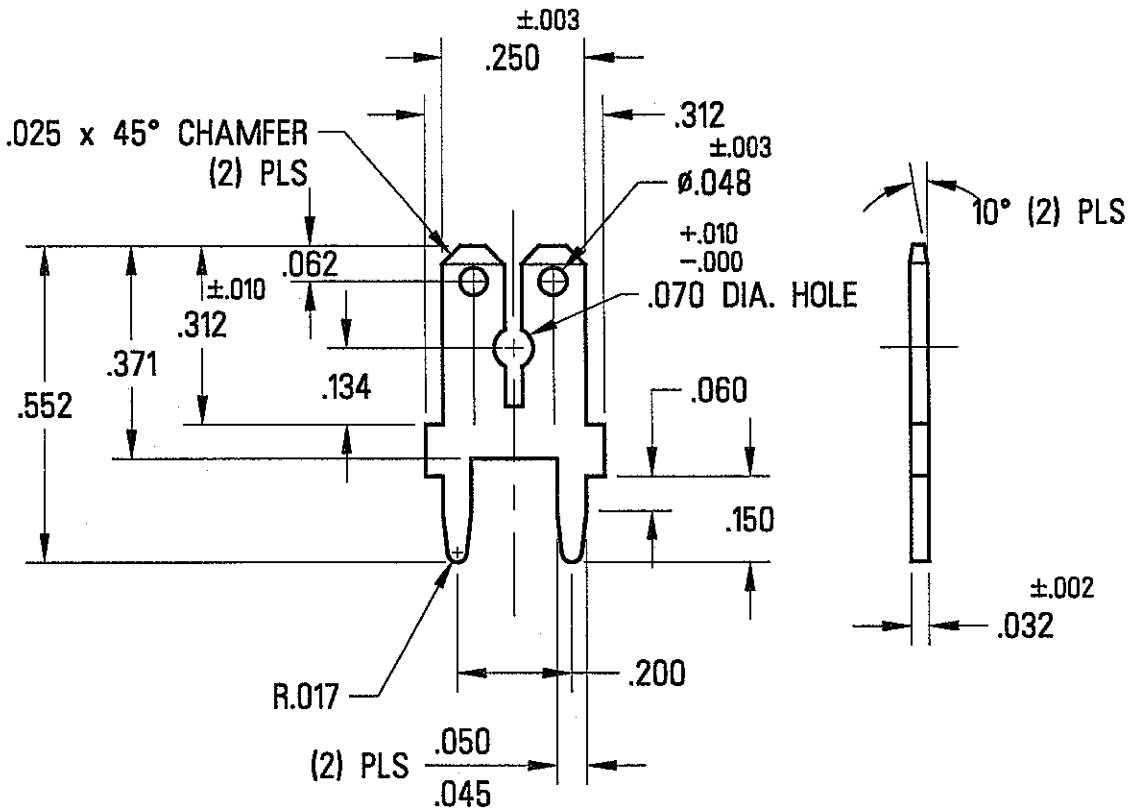

KEYSTONE ELECTRONICS CORP. ASTORIA, N.Y. 11105-2017			
PART NAME: PC QUICK-FIT TERMINAL			
MATERIAL: .032 TH'K BRASS			
FINISH: NICKEL PLATE	DRN BY: LARRY	DATE: 5/5/00	
	APP'D:	SCALE: 3X	
TOLERANCES INCH [MM] DECIMAL ±.005 [±0.15] ANGULAR ± 1/2° UNLESS OTHERWISE SPECIFIED	CODE: M	DWG NO.: 9-1282-NP	

DATE	DESCRIPTION	REV.