THIS DOCUMENT IS THE PROPERTY OF KEYSTONE ELECTRONICS CORP. AND SHALL NOT BE REPRODUCED, DISTRIBUTED OR USED AS A BASIS FOR MANUFACTURE WITHOUT PRIOR WRITTEN PERMISSION FROM KEYSTONE ELECTRONICS CORP.

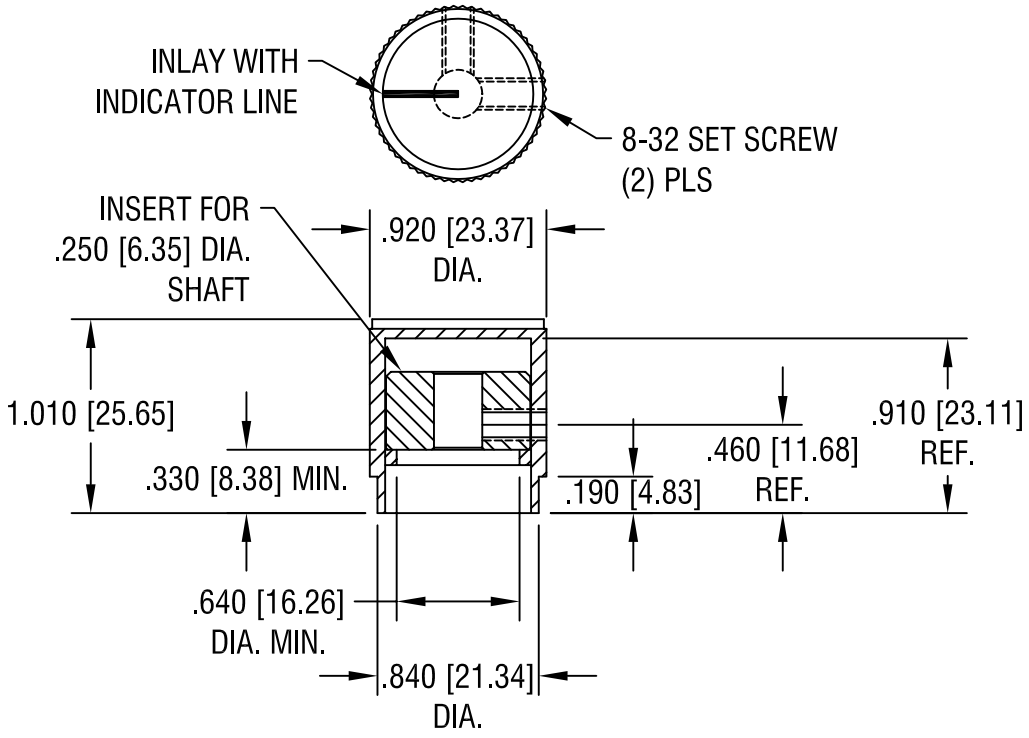

NOTES:

1. KNOB: MAT'L: ABS, BLACK
   INSERT: MAT'L: BRASS, NICKEL PLATE
   INLAY: MAT'L: SPUN ALUMINUM WITH
   INDICATOR LINE.

DATE	DESCRIPTION	REV.

KEYSTONE ELECTRONICS CORP.
ASTORIA, N.Y. 11105-2017

PART NAME: KNOB			
MATERIAL: AS NOTED			
FINISH: AS NOTED	DRN BY: BOONE	DATE: 1.8.07	
	APP'D:	SCALE: 1X	
TOLERANCES INCH [MM] DECIMAL ± .015 [± 0.38] ANGULAR ± 1° UNLESS OTHERWISE SPECIFIED	CODE: C/M	DWG NO.: 8556	