THIS DOCUMENT IS THE PROPERTY OF KEYSTONE ELECTRONICS CORP. AND SHALL NOT BE REPRODUCED, DISTRIBUTED OR USED AS A BASIS FOR MANUFACTURE WITHOUT PRIOR WRITTEN PERMISSION FROM KEYSTONE ELECTRONICS CORP.

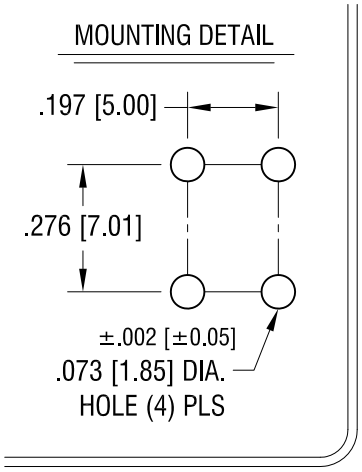

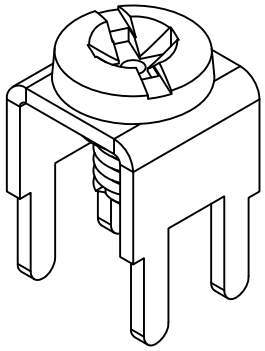

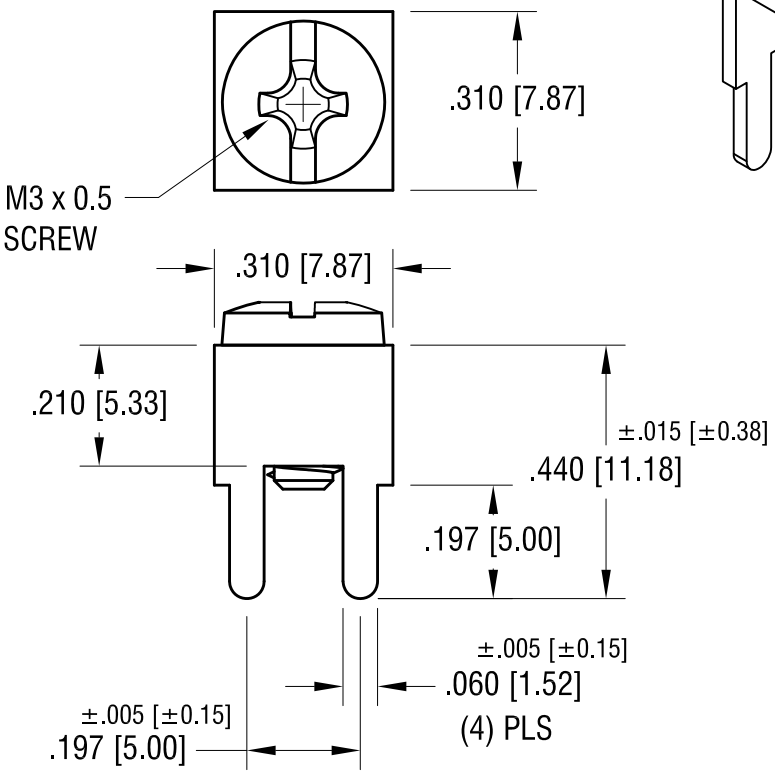

NOTE:

1. TERMINAL:
   MAT'L - .032 [0.81] TH'K BRASS, MATTE TIN PLATE

   SCREW : ONE (1) M3 x 0.5 SCREW (CAPTIVE)
   MAT'L - BRASS, NICKEL PLATE
   HEAD OF SCREW IS POWDER COATED
   WITH COLOR AS INDICATED IN CHART.

PC SCREW TERMINAL WITH COLORED SCREW HEAD

PART NO.	HEAD COLOR
7772-2	RED
7772-3	BLACK
7772-4	WHITE

PART NO.	HEAD COLOR
7772-5	BLUE
7772-6	GREEN
7772-7	YELLOW

DATE	DESCRIPTION	REV.

KEYSTONE ELECTRONICS CORP.

www.keyelco.com • ASTORIA, N.Y. 11105-2017 • Tel (718) 956-8900

PART NAME: PC SCREW TERMINAL			
MATERIAL: AS NOTED			
FINISH: AS NOTED	DRN BY: NT	DATE: 1.27.10	
	APP'D: LN	SCALE: 3X	
TOLERANCES: INCH [MM] DECIMAL ± .010 [± 0.25] ANGULAR ± 1° UNLESS OTHERWISE SPECIFIED	CODE: C	DWG NO.: 7772-2 - 7772-7	