THIS DOCUMENT IS THE PROPERTY OF KEYSTONE ELECTRONICS CORP. AND SHALL NOT BE REPRODUCED, DISTRIBUTED OR USED AS A BASIS FOR MANUFACTURE WITHOUT PRIOR WRITTEN PERMISSION FROM KEYSTONE ELECTRONICS CORP.

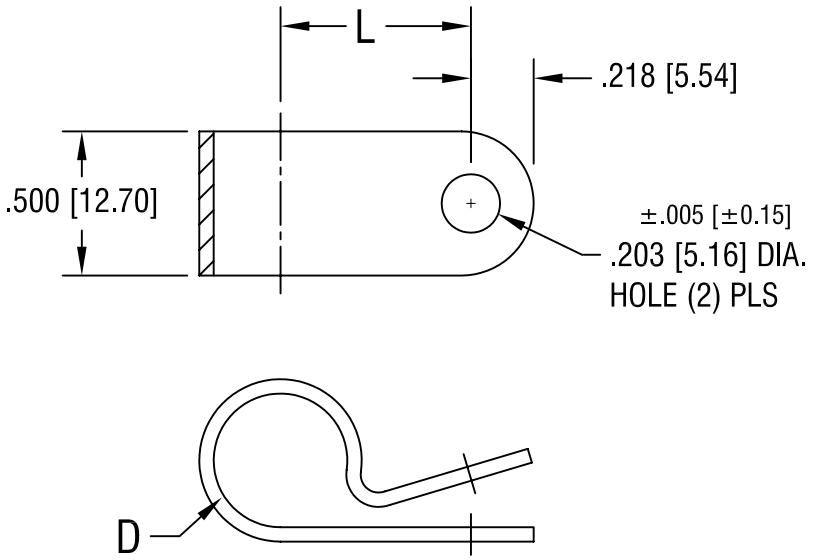


| 'L' DIM. | 'D' FOR DIA. |
|---|---|
| 1.060 [26.92] | 1.250 [31.75] |

**KEYSTONE ELECTRONICS CORP.**
ASTORIA, N.Y. 11105-2017

PART NAME: NYLON CABLE CLAMP

MATERIAL: .050 [1.27] TH'K NYLON 6/6

FINISH: -

DRN BY: BOONE | DATE: 11.2.06

APP'D: | SCALE: NONE

TOLERANCES INCH [MM]
DECIMAL ± .015 [± 0.38 ]
ANGULAR ± 1°
UNLESS OTHERWISE SPECIFIED

CODE: C/M

DWG NO. 7640

| DATE | DESCRIPTION | REV. |
|---|---|---|