THIS DOCUMENT IS THE PROPERTY OF KEYSTONE ELECTRONICS CORP. AND SHALL NOT BE REPRODUCED, DISTRIBUTED OR USED AS A BASIS FOR MANUFACTURE WITHOUT PRIOR WRITTEN PERMISSION FROM KEYSTONE ELECTRONICS CORP.

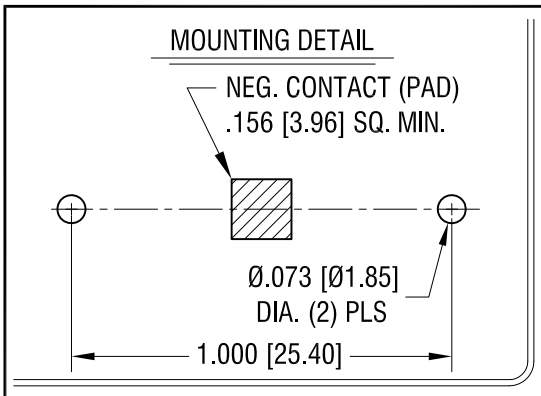

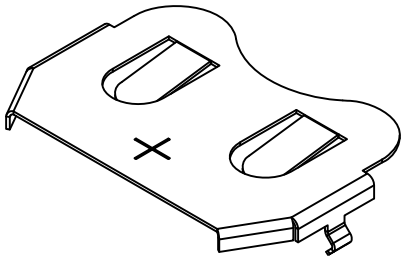

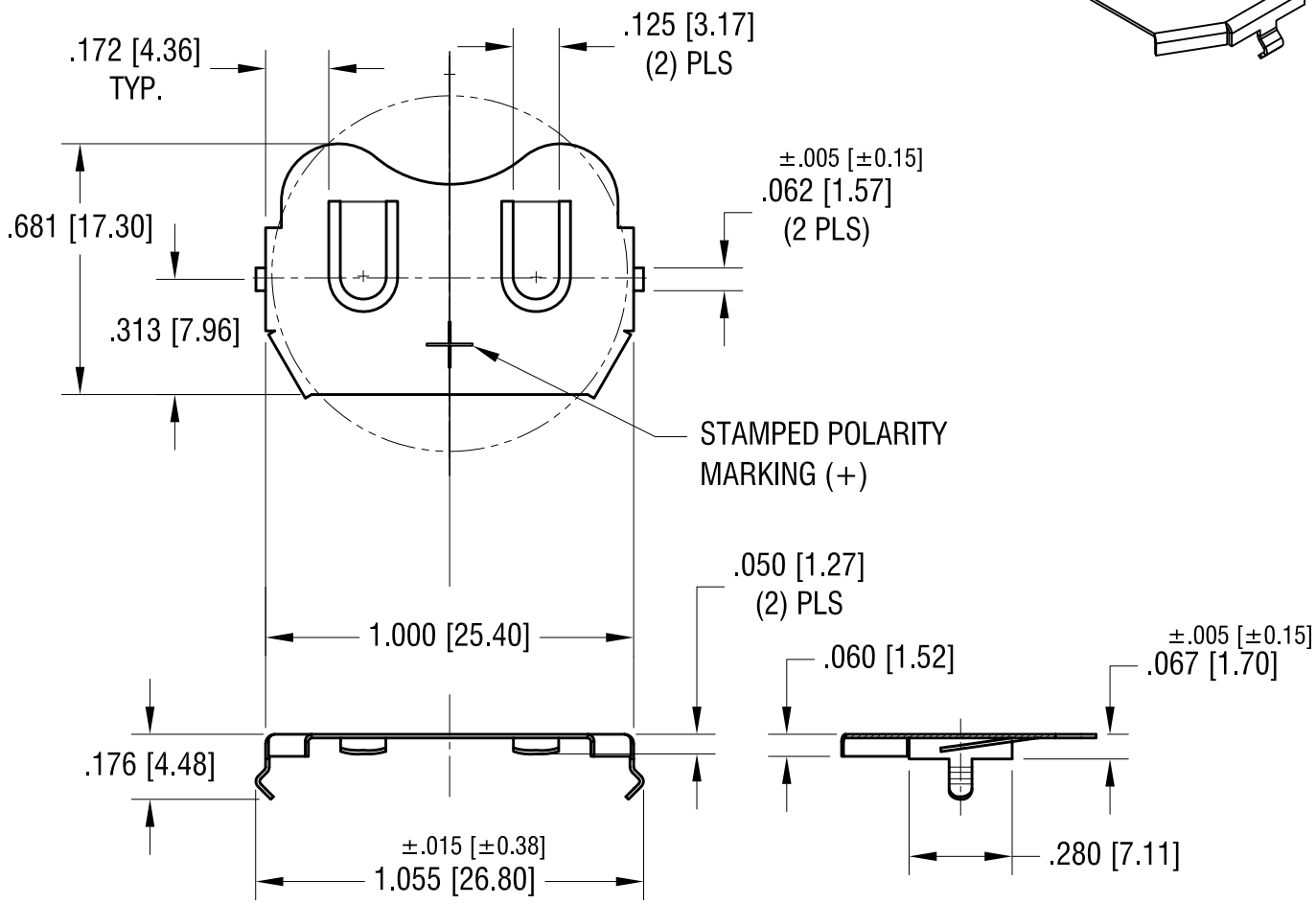

DATE	DESCRIPTION	REV.
2.24.11	CHANGE AS PER ECN 11–022	A

KEYSTONE ELECTRONICS CORP.

www.keyelco.com • ASTORIA, N.Y. 11105-2017 • Tel (718) 956-8900

PART NAME	2412 THM COIN CELL CLIP		
MATERIAL	.010 [0.25] TH'K PHOSPHOR BRONZE		
FINISH	TIN NICKEL PLATE	DRN BY NT	DATE 2.16.11
		APP'D LN	SCALE 2X
TOLERANCES INCH [MM] DECIMAL ± .010 [± 0.25] ANGULAR ± 1° UNLESS OTHERWISE SPECIFIED	CODE C	DWG NO. 3033	