THIS DOCUMENT IS THE PROPERTY OF KEYSTONE ELECTRONICS CORP. AND SHALL NOT BE REPRODUCED, DISTRIBUTED OR USED AS A BASIS FOR MANUFACTURE WITHOUT PRIOR WRITTEN PERMISSION FROM KEYSTONE ELECTRONICS CORP.

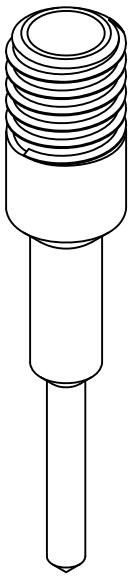

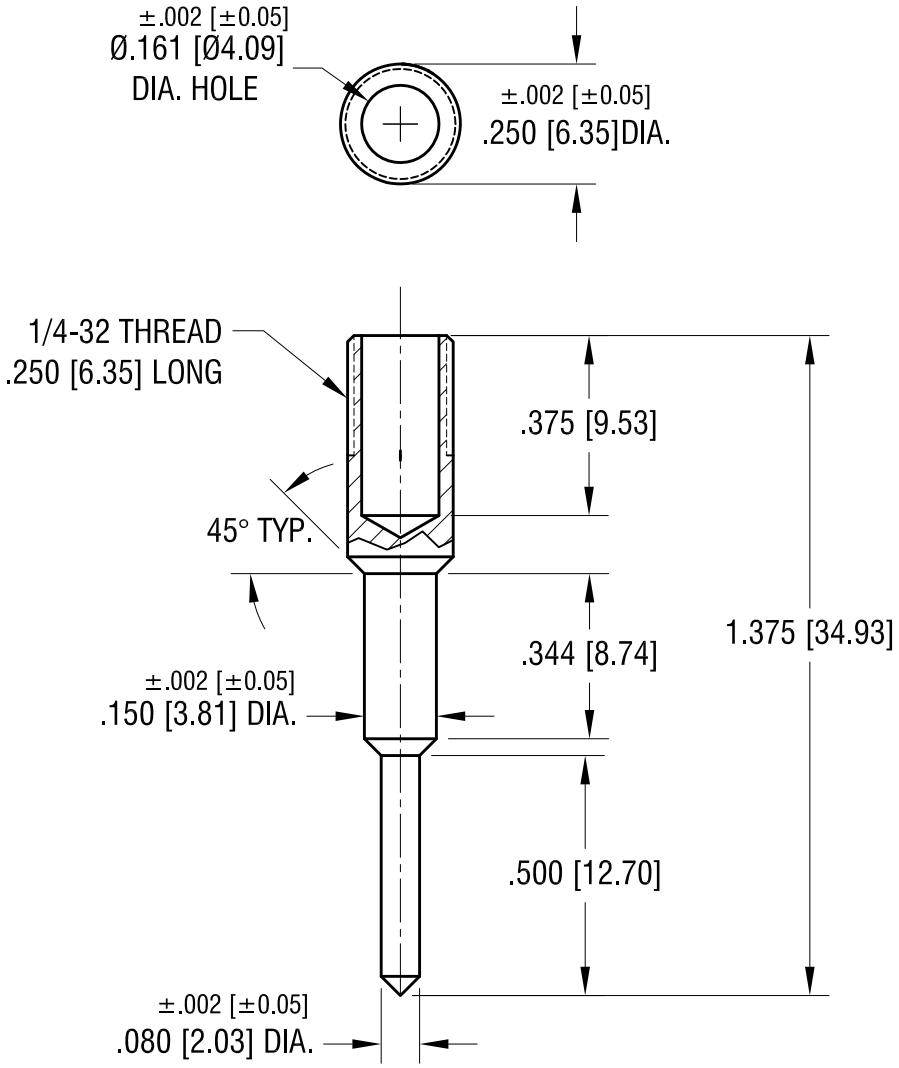

DATE	DESCRIPTION	REV.
10.15.10	REDRAWN IN CAD FORMAT	

KEYSTONE ELECTRONICS CORP.

www.keyelco.com • ASTORIA, N.Y. 11105-2017 • Tel (718) 956-8900

PART NAME	TEST PROD		
MATERIAL	BRASS, HALF HARD		
FINISH	NICKEL PLATE	DRN BY LN	DATE 6.9.82
		APP'D LN	SCALE 2.5X
TOLERANCES INCH [MM] DECIMAL ± .015 [± 0.38] ANGULAR ± 1° UNLESS OTHERWISE SPECIFIED	CODE C/M	DWG NO. 3019	