THIS DOCUMENT IS THE PROPERTY OF KEYSTONE ELECTRONICS CORP. AND SHALL NOT BE REPRODUCED, DISTRIBUTED OR USED AS A BASIS FOR MANUFACTURE WITHOUT PRIOR WRITTEN PERMISSION FROM KEYSTONE ELECTRONICS CORP.

ACTUAL SIZE

P/N 24440

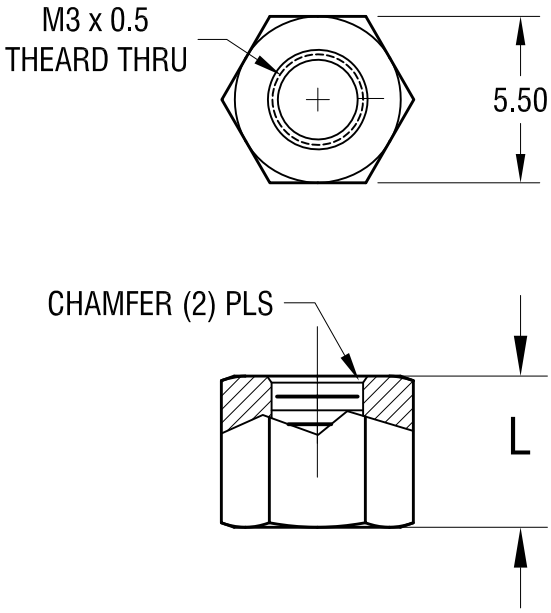

PART NO.	'L' DIM.
24440	5.00
24441	6.00
24442	8.00
24443	10.00
24444	12.00

NOTE:

1. ALL DIMENSIONS ARE IN MILLIMETERS

DATE	DESCRIPTION	REV.
10.18.23	CHANGE AS PER ECN 23–205	A

KEYSTONE ELECTRONICS CORP.

www.keyelco.com ● NEW HYDE PARK, NY 11040 ● Tel (516) 328-7500

PART NAME: 5.5 mm THREADED HEX STANDOFF

MATERIAL: LEAD FREE ALUMINUM

FINISH: CLEAR IRIDITE

DRN BY: BOONE

DATE: 5.08.06

APP'D: MR

SCALE: 4X

TOLERANCES INCH [MM]
DECIMAL ± .005 [± 0.13]
ANGULAR ± 1°
UNLESS OTHERWISE SPECIFIED

CODE: C

DWG NO. 24440-24444