THIS DOCUMENT IS THE PROPERTY OF KEYSTONE ELECTRONICS CORP. AND SHALL NOT BE REPRODUCED, DISTRIBUTED OR USED AS A BASIS FOR MANUFACTURE WITHOUT PRIOR WRITTEN PERMISSION FROM KEYSTONE ELECTRONICS CORP.

ACTUAL SIZE

P/N 24440

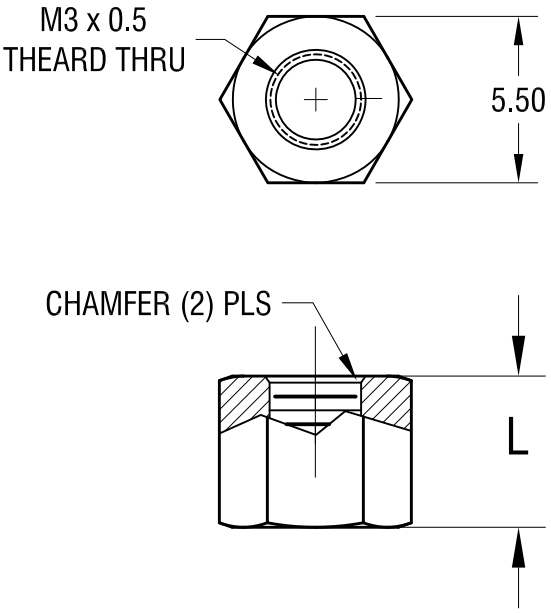


| PART NO. | 'L' DIM. |
|---|---|
| 24440 | 5.00 |
| 24441 | 6.00 |
| 24442 | 8.00 |
| 24443 | 10.00 |
| 24444 | 12.00 |

NOTE:

1. ALL DIMENSIONS ARE IN MILLIMETERS

| DATE | DESCRIPTION | REV. |
|---|---|---|
| 10.18.23 | CHANGE AS PER ECN 23-205 | A |

**KEYSTONE ELECTRONICS CORP.**

www.keyelco.com ● NEW HYDE PARK, NY 11040 ● Tel (516) 328-7500

PART NAME: 5.5 mm THREADED HEX STANDOFF

MATERIAL: LEAD FREE ALUMINUM

FINISH: CLEAR IRIDITE

DRN BY: BOONE | DATE: 5.08.06

APP'D: MR | SCALE: 4X

TOLERANCES INCH [MM]
DECIMAL ± .005 [± 0.13 ]
ANGULAR ± 1°
UNLESS OTHERWISE SPECIFIED

CODE: C

DWG NO.: 24440-24444