THIS DOCUMENT IS THE PROPERTY OF KEYSTONE ELECTRONICS CORP. AND SHALL NOT BE REPRODUCED, DISTRIBUTED OR USED AS A BASIS FOR MANUFACTURE WITHOUT PRIOR WRITTEN PERMISSION FROM KEYSTONE ELECTRONICS CORP.

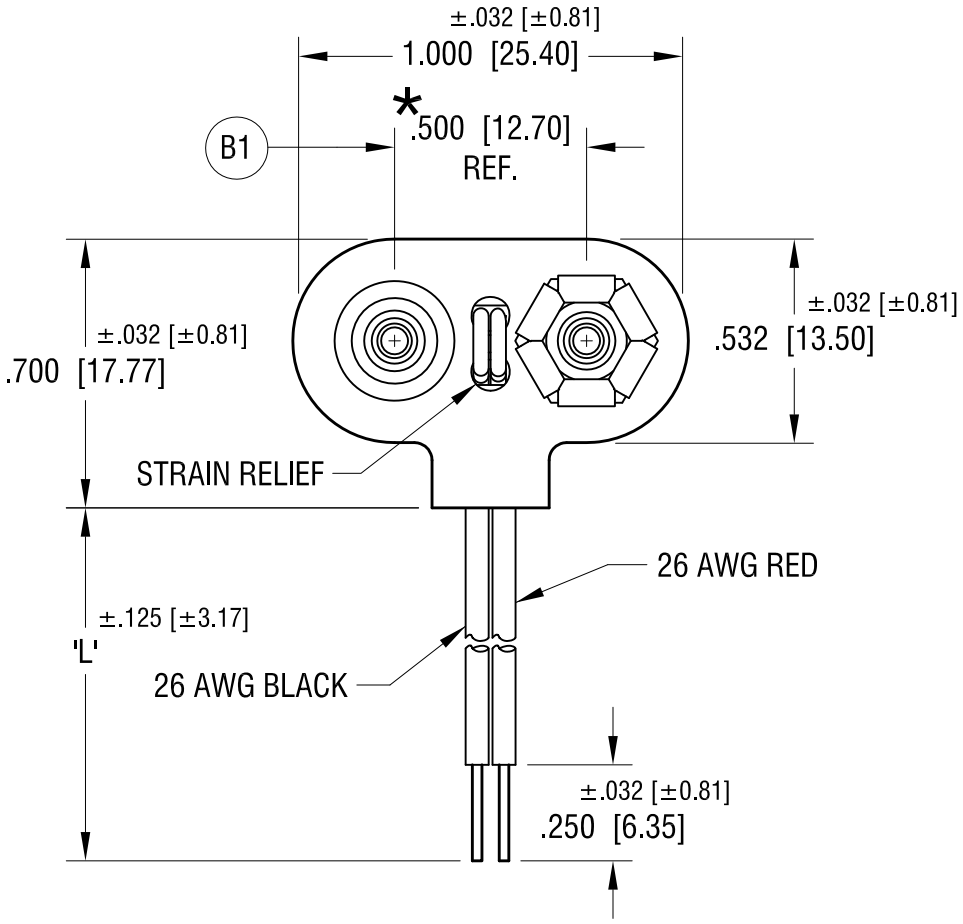

ACTUAL SIZE

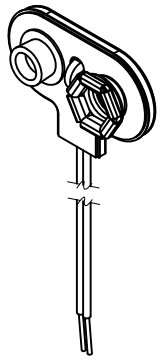

NOTE:

1. WIRE: 26 AWG, 1007 UL/CSA APPROVED
2. CONTACTS: BRASS, NICKEL PLATE
3. INSULATION: MAT'L- VINYL .012 [0.30] MINIMUM THICKNESS
4. PLATE/INSUTATOR: MAT'L- FIBER .032 [0.81] THICK
5. RED WIRE CONNECTED TO FEMALE CONTACT;
   BLACK WIRE CONNECTED TO MALE CONTACT.
6. * REF. DIMENSION MUST FIT
   INDUSTRY STANDARD 9 VOLT BATTERY.

PART NO.	'L' DIM.
235	4.000 [101.60]
236	6.000 [152.40]
237	8.000 [203.20]

DATE	DESCRIPTION	REV.
8.23.21	(B1) WAS .500±.005, ADD NOT 6. CHANGE AS PER ECN 21–097	B
2.09.21	INSULATION WAS PVC CHANGE AS PER ECN 21–018	A

KEYSTONE ELECTRONICS CORP.

www.keyelco.com ● NEW HYDE PARK, NY 11040 ● Tel (516) 328-7500

PART NAME: ECONOMY '9' VOLT BATTERY STRAP

MATERIAL: AS NOTED

FINISH: AS NOTED

DRN BY: BOONE | DATE: 8.08.95

APP'D: LN | SCALE: 2X

TOLERANCES INCH [MM]
DECIMAL ± .015 [± 0.38]
ANGULAR ± 1°
UNLESS OTHERWISE SPECIFIED

CODE: C

DWG NO.: 235-237