THIS DOCUMENT IS THE PROPERTY OF KEYSTONE ELECTRONICS CORP. AND SHALL NOT BE REPRODUCED, DISTRIBUTED OR USED AS A BASIS FOR MANUFACTURE WITHOUT PRIOR WRITTEN PERMISSION FROM KEYSTONE ELECTRONICS CORP.

ACTUAL SIZE

P/N 2025

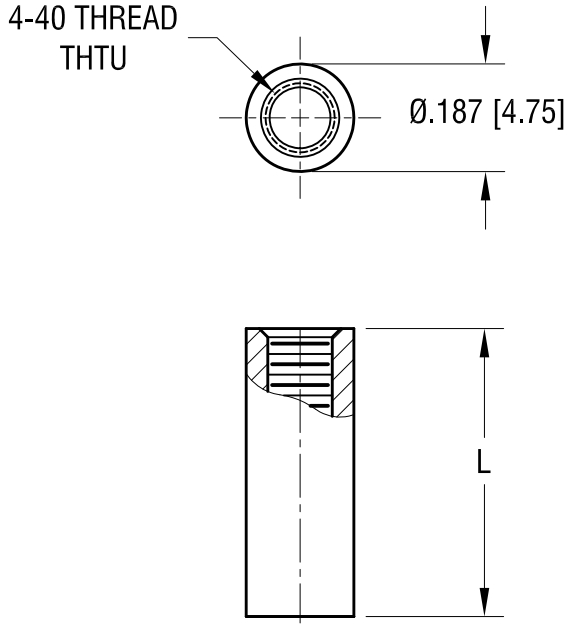

PART NO.	'L' DIM.
2025	.250 [6.35]
2026	.375 [9.53]
2027	.500 [12.70]
2028	.625 [15.88]
2029	.750 [19.05]
2030	.875 [22.23]
2031	1.000 [25.40]

DATE	DESCRIPTION	REV.
1.04.24	CHANGE AS PER ECN 24–008	B
7.7.22	CHANGE AS PER ECN 22–111	A

KEYSTONE ELECTRONICS CORP.

www.keyelco.com ● NEW HYDE PARK NY 11040 ● Tel (516)328-7500

PART NAME: THREADED ROUND STANDOFF

MATERIAL: LEAD FREE ALUMINUM

FINISH: CLEAR IRIDITE

DRN BY: BOONE | DATE: 3.10.98

APP'D: RH | SCALE: 3X

TOLERANCES INCH [MM]
DECIMAL ± .005 [± 0.13]
ANGULAR ± 1°
UNLESS OTHERWISE SPECIFIED

CODE: C

DWG NO. 2025-2031