THIS DOCUMENT IS THE PROPERTY OF KEYSTONE ELECTRONICS CORP. AND SHALL NOT BE REPRODUCED, DISTRIBUTED OR USED AS A BASIS FOR MANUFACTURE WITHOUT PRIOR WRITTEN PERMISSION FROM KEYSTONE ELECTRONICS CORP.

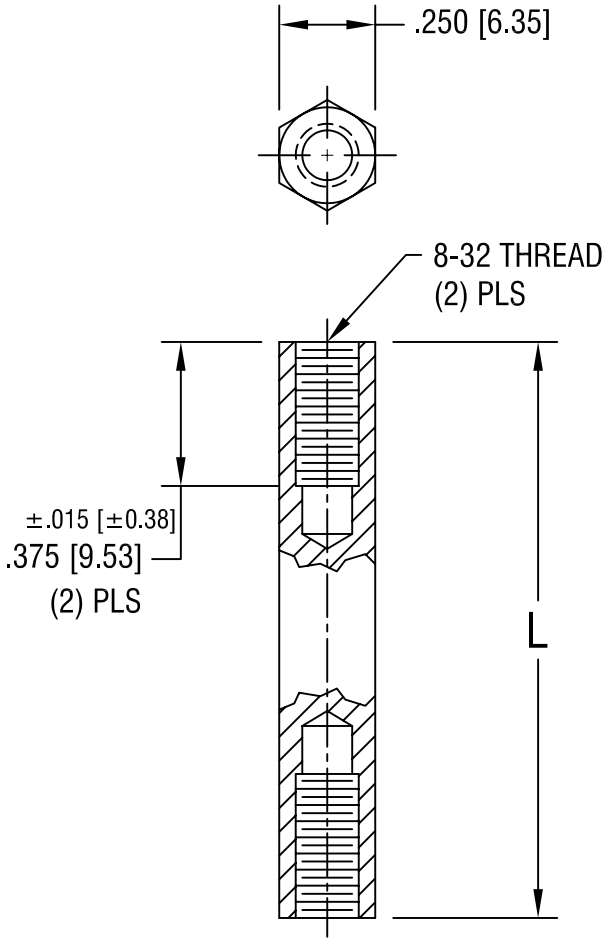

PART NO.	'L' DIM.
1923E	1.500 [38.10]
1923F	2.000 [50.80]

DATE	DESCRIPTION	REV.

KEYSTONE ELECTRONICS CORP.
ASTORIA, N.Y. 11105-2017

PART NAME: HEX STAINLESS THREADED STANDOFF

MATERIAL: STAINLESS STEEL

FINISH: -

DRN BY: BOONE | DATE: 6.14.96

APP'D: | SCALE: 2X

TOLERANCES INCH [MM]
DECIMAL ± .005 [± 0.15]
ANGULAR ± 1°
UNLESS OTHERWISE SPECIFIED

CODE: C/M

DWG NO. 1923E-1923F