THIS DOCUMENT IS THE PROPERTY OF KEYSTONE ELECTRONICS CORP. AND SHALL NOT BE REPRODUCED, DISTRIBUTED OR USED AS A BASIS FOR MANUFACTURE WITHOUT PRIOR WRITTEN PERMISSION FROM KEYSTONE ELECTRONICS CORP.

ACTUAL SIZE

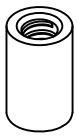

PART NUMBER 1801B

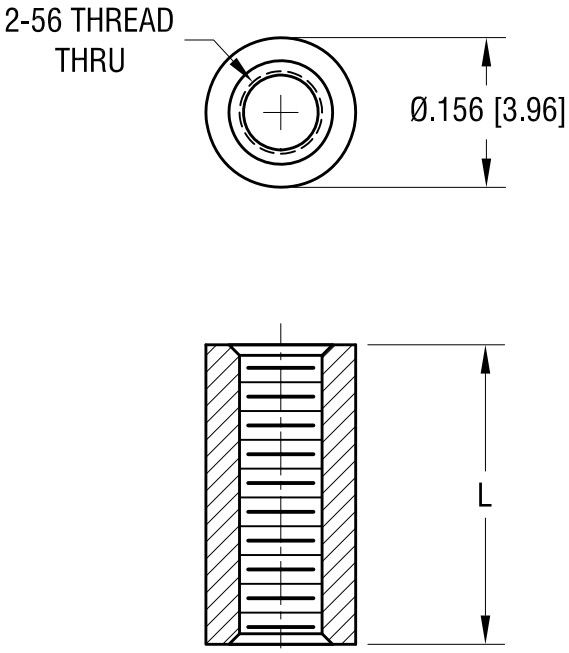

PART NO.	'L' DIM.
1801A	.187 [4.75]
1801B	.250 [6.35]
1801C	.312 [7.92]
1801D	.375 [9.53]

DATE	DESCRIPTION	REV.
1.04.24	CHANGE AS PER ECN 24–007	B
9.23.08	CHANGE AS PER ECN 08–163	A

KEYSTONE ELECTRONICS CORP.

www.keyelco.com • NEW HYDE PARK NY 11040 • Tel (516)328-7500

PART NAME: THREADED ROUND STANDOFF

MATERIAL: LEAD FREE ALUMINUM

FINISH: CLEAR IRIDITE

DRN BY: BOONE | DATE: 7.23.82

APP'D: RH | SCALE: 5X

TOLERANCES INCH [MM]
DECIMAL ± .005 [± 0.13]
ANGULAR ± 1°
UNLESS OTHERWISE SPECIFIED

CODE: C

DWG NO. 1801A-1801D