THIS DOCUMENT IS THE PROPERTY OF KEYSTONE ELECTRONICS CORP. AND SHALL NOT BE REPRODUCED, DISTRIBUTED OR USED AS A BASIS FOR MANUFACTURE WITHOUT PRIOR WRITTEN PERMISSION FROM KEYSTONE ELECTRONICS CORP.

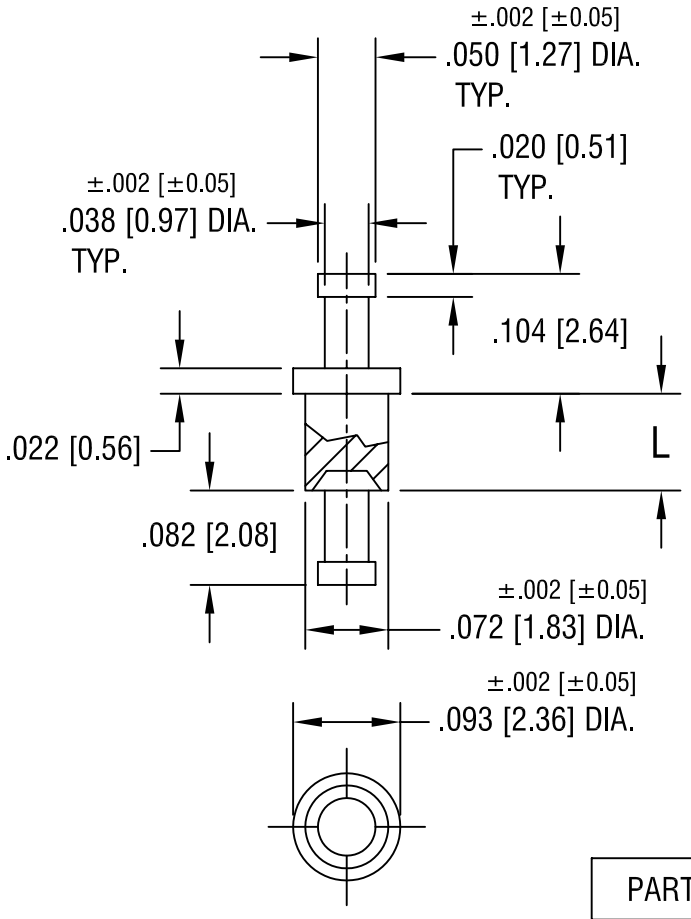

PART NO.	'L' DIM.
1574-1	.051 [1.30]
1574-2	.082 [2.08]
1574-3	.113 [2.87]
1574-4	.145 [3.68]

KEYSTONE ELECTRONICS CORP.
ASTORIA, N.Y. 11105-2017

PART NAME: TERMINAL

MATERIAL: BRASS

FINISH: TIN PLATE

DRN BY: BOONE | DATE: 2.12.02

APP'D: LN | SCALE: 6X

TOLERANCES INCH [MM]
DECIMAL ± .005 [± 0.15]
ANGULAR ± 1°
UNLESS OTHERWISE SPECIFIED

CODE: C/M

DWG NO. 1574-

DATE	DESCRIPTION	REV.