THIS DOCUMENT IS THE PROPERTY OF KEYSTONE ELECTRONICS CORP. AND SHALL NOT BE REPRODUCED, DISTRIBUTED OR USED AS A BASIS FOR MANUFACTURE WITHOUT PRIOR WRITTEN PERMISSION FROM KEYSTONE ELECTRONICS CORP.

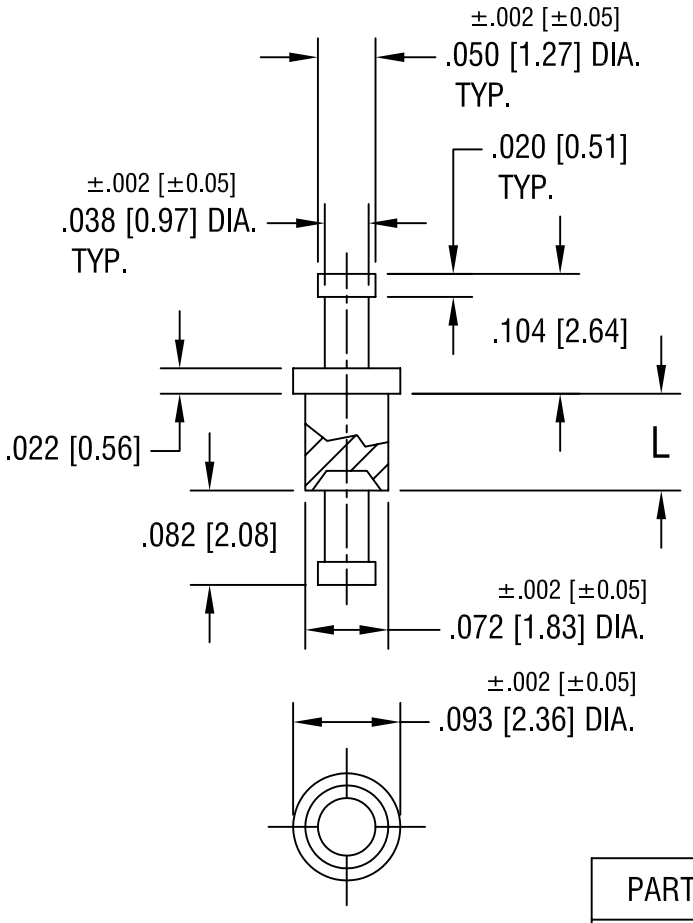

PART NO.	'L' DIM.
1574-1	.051 [1.30]
1574-2	.082 [2.08]
1574-3	.113 [2.87]
1574-4	.145 [3.68]

KEYSTONE ELECTRONICS CORP.
ASTORIA, N.Y. 11105-2017

PART NAME: TERMINAL			
MATERIAL: BRASS			
FINISH: TIN PLATE	DRN BY: BOONE	DATE: 2.12.02	
	APP'D: LN	SCALE: 6X	
TOLERANCES INCH [MM] DECIMAL ± .005 [± 0.15] ANGULAR ± 1° UNLESS OTHERWISE SPECIFIED	CODE: C/M	DWG NO.: 1574-	

DATE	DESCRIPTION	REV.