THIS DOCUMENT IS THE PROPERTY OF KEYSTONE ELECTRONICS CORP. AND SHALL NOT BE REPRODUCED, DISTRIBUTED OR USED AS A BASIS FOR MANUFACTURE WITHOUT PRIOR WRITTEN PERMISSION FROM KEYSTONE ELECTRONICS CORP.

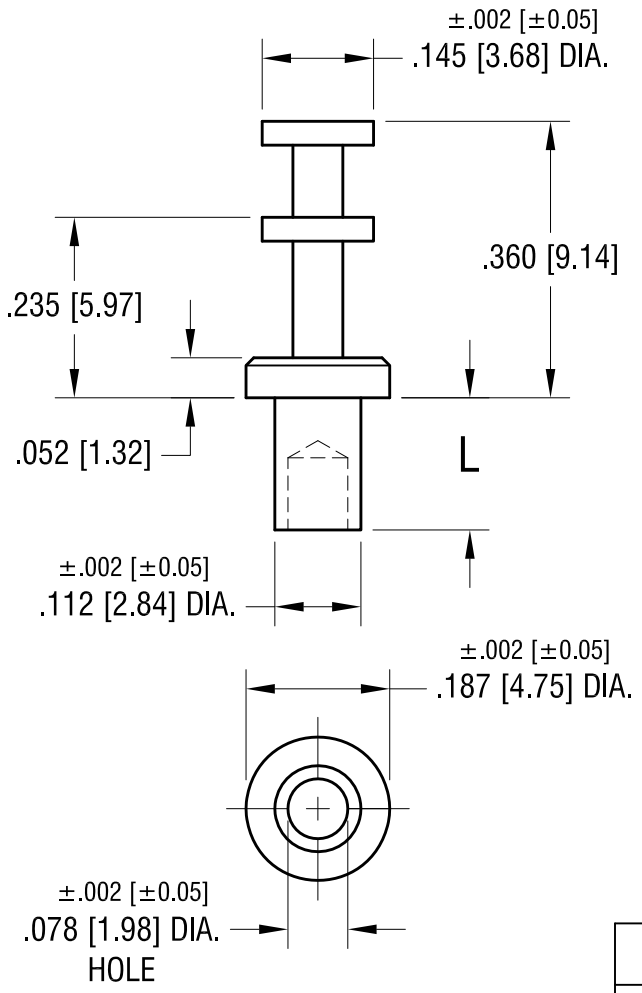

PART NO.	'L' DIM.
1503-1	.078 [1.98]
1503-2	.109 [2.77]
1503-3	.141 [3.58]
1503-4	.172 [4.37]

DATE	DESCRIPTION	REV.
9.14.12	CHANGE AS PER ECN 12–142	C
8.30.12	CHANGE AS PER ECN 12–120	B
2.8.08	CHANGE AS PER ECN 08–076	A

KEYSTONE ELECTRONICS CORP.

www.keyelco.com • ASTORIA, N.Y. 11105-2017 • Tel (718) 956-8900

PART NAME: SOLDER TERMINAL, DOUBLE TURRET

MATERIAL: BRASS

FINISH: TIN PLATE

DRN BY: BOONE | DATE: 3.6.02

APP'D: LN | SCALE: 4X

TOLERANCES INCH [MM]
DECIMAL ± .005 [± 0.15]
ANGULAR ± 1°
UNLESS OTHERWISE SPECIFIED

CODE: C

DWG NO. 1503-