THIS DOCUMENT IS THE PROPERTY OF KEYSTONE ELECTRONICS CORP. AND SHALL NOT BE REPRODUCED, DISTRIBUTED OR USED AS A BASIS FOR MANUFACTURE WITHOUT PRIOR WRITTEN PERMISSION FROM KEYSTONE ELECTRONICS CORP.

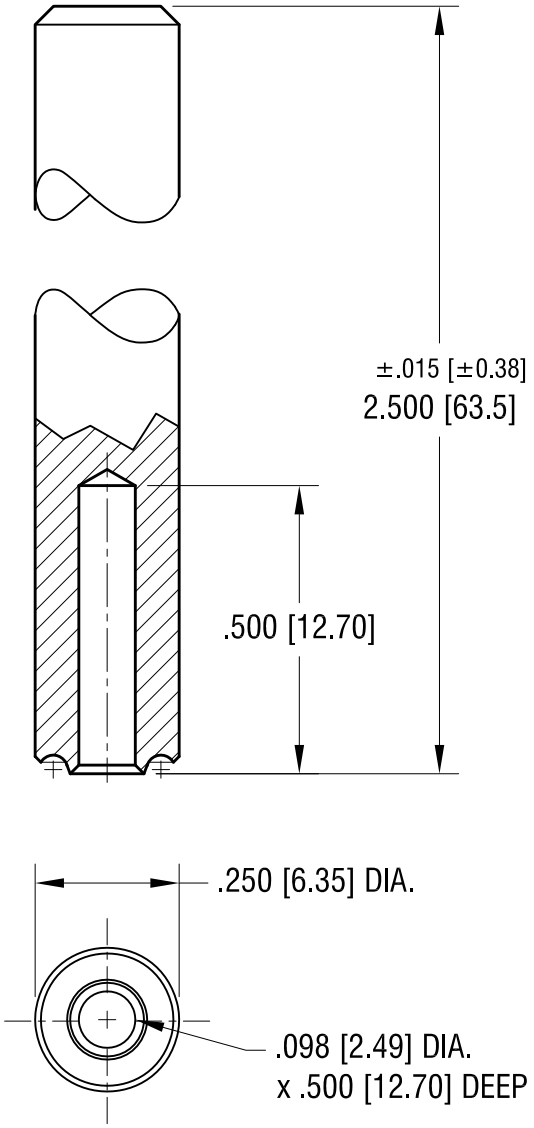

DATE	DESCRIPTION	REV.
12.19.12	CHANGE AS PER ECN 12–160	C
7.31.07	CHANGE AS PER ECN 07–042	B

KEYSTONE ELECTRONICS CORP.

www.keyelco.com • ASTORIA, N.Y. 11105-2017 • Tel (718) 956-8900

PART NAME: STAKING TOOL			
MATERIAL: C.R.S.			
FINISH: ZINC PLATE	DRN BY: BOONE	DATE: 12.14.81	
	APP'D: LN	SCALE: 3X	
TOLERANCES INCH [MM] DECIMAL ± .005 [± 0.15] ANGULAR ± 1° UNLESS OTHERWISE SPECIFIED	CODE: C	DWG NO. 1324	