K&E 10 7155 10-81 42021•

NO.

REV.

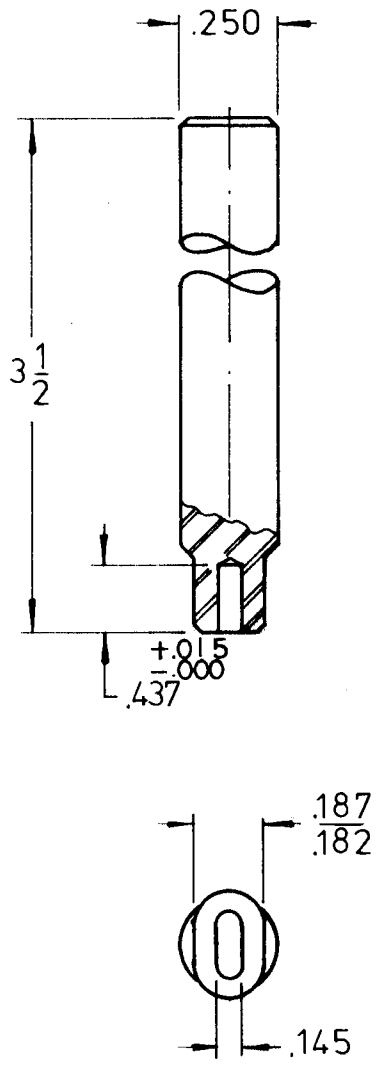

KEYSTONE ELECTRONICS CORP. NEW YORK, N.Y. 10012		
PART NAME INSERTION TOOL		
MATERIAL CRS		
FINISH CAD. PLATE CLEAR IRIDITE	DRAWN BY L.N.	DATE 5.18.82
	APPROVED A.A.	SCALE ——
TOLERANCES FRACTIONAL ± .015 DECIMAL ± .005 ANGULAR ± ½° UNLESS OTHERWISE NOTED	DWG. NO. 1323	

DATE	REVISION	ISSUE