THIS DOCUMENT IS THE PROPERTY OF KEYSTONE ELECTRONICS CORP. AND SHALL NOT BE REPRODUCED, DISTRIBUTED OR USED AS A BASIS FOR MANUFACTURE WITHOUT PRIOR WRITTEN PERMISSION FROM KEYSTONE ELECTRONICS CORP.

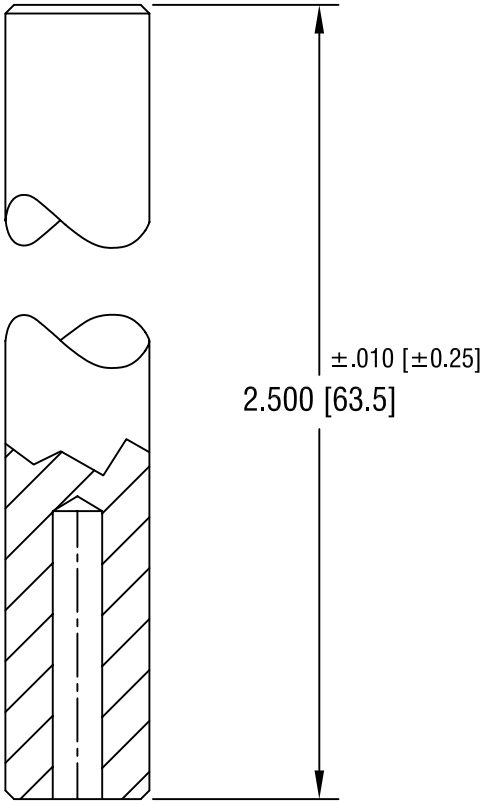


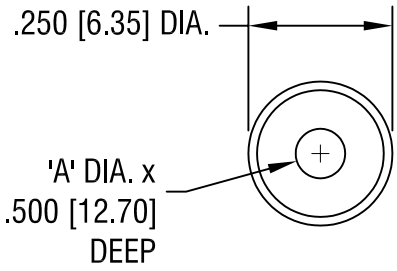


| PART NO. | 'A' DIA. |
|---|---|
| 1304 | .051 [1.30] |
| 1305 | .063 [1.60] |
| 1306 | .073 [1.85] |
| 1307 | .086 [2.18] |

**KEYSTONE ELECTRONICS CORP.**
ASTORIA, N.Y. 11105-2017

PART NAME: TOP SETTING TOOL

MATERIAL: C.R.S.

FINISH: ZINC PLATE

DRN BY: BOONE | DATE: 10.15.05

APP'D: | SCALE: 3X

TOLERANCES INCH [MM]
DECIMAL ± .005 [± 0.15 ]
ANGULAR ± 1°
UNLESS OTHERWISE SPECIFIED

CODE: C

DWG NO.: 1304-1307

| DATE | DESCRIPTION | REV. |
|---|---|---|